Fräs-Motorspindel 2717.0 – Datenblatt

Technische Daten

Produktkategorie	High-Speed-Fräsen
Applikation	Fräsen
Werkzeugaufnahme	HSK-A80, Automatische Werkzeugspannung
Nennleistung	48kW
Nenndrehzahl	7.700rpm
Maximaldrehzahl	16.000rpm
Drehmoment	60Nm
Drehgeber	1VSS integriert

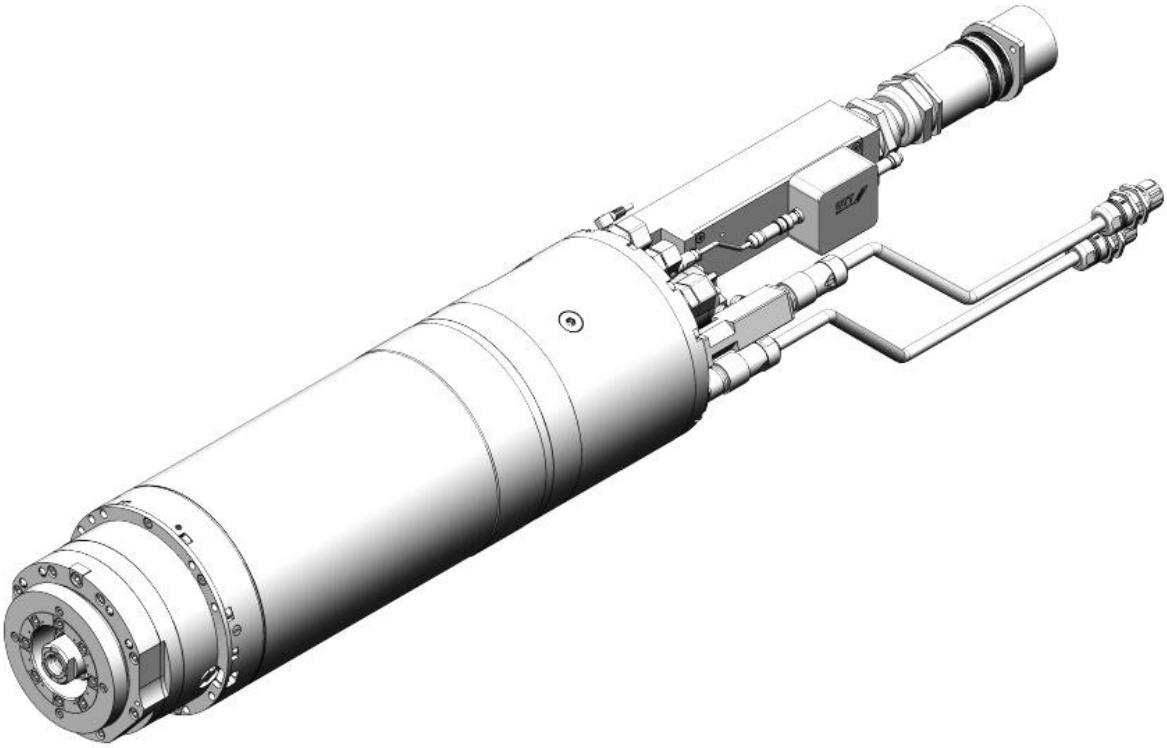

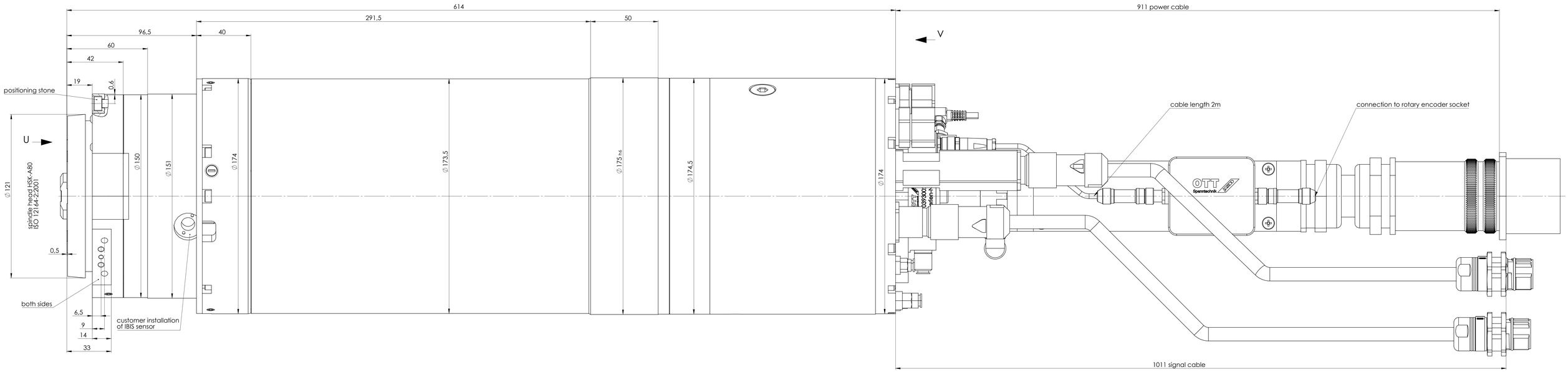

view U

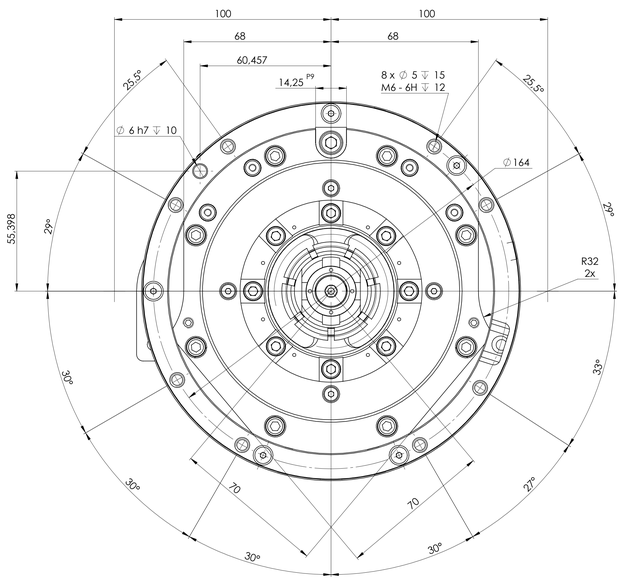

view V

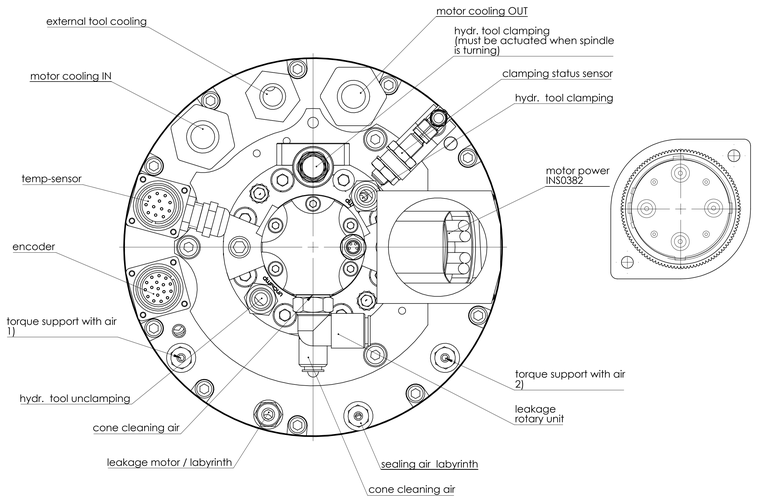

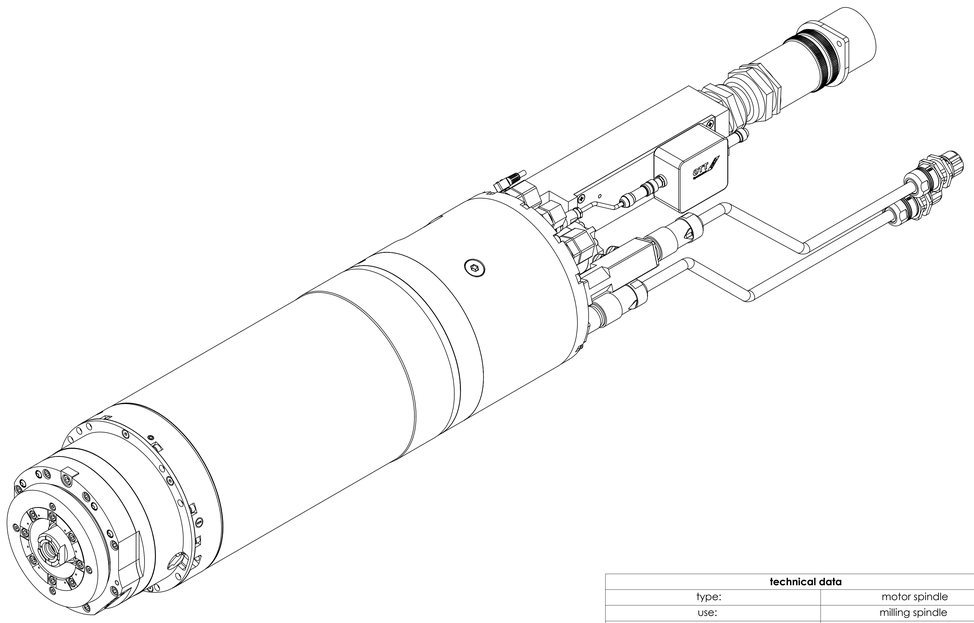

technical data	
type:	motor spindle
use:	milling spindle
speed:	16000 rpm
motor:	type: 1FE1 074-4WM 31-6BA2, synchron wafer cooling Q: 8 ...10 lpm pmax: 7 bar
bearings:	hybrid bearing, grease lubrication
clamping system:	IFH80-AB-5-ES0300-0538,0
encoder:	RGM2G-AM2-M3Z/P050
sealing air:	0,8bar max. 1bar (measured at the spindle connection)
installation position:	horizontal

tool clamping system, mfg. OTT-Jakob

Hollow shank ISO1214-1 HSK-A80
IIFH80-AB-5-ES0300-0538,0

Technical Data

clamping force	18 kN
speed	16000 rpm
Piston diameter	57 mm
Piston surface area (Loosening)	19.36 cm²
Piston surface area (Clamping)	16.96 cm²
Max. oil volume	45 cm³
Max. stroke	11 mm

rotary unit, mfg. OTT-Jakob

Technical Data

medium:	coolant
speed:	16000 rpm max. 36000 rpm)
max. pressure:	105 bar (max. 140 bar)
temperature off cooling lubrication fluid	max.71°C
axial movement	up to 19 mm

sensor clamping tool position, mfg. OTT-Jakob

type: Stroke measureing system
function: analogous:
operating voltage 18...28V DC
operating current (No-load) max. 100mA
nominal operating voltage 24V DC
ambient temperature max. 80 °C
signal 4...20mA

encoder RGM2G-A-V5Z-256/T30, mfg. VS-Sensorik

measuring wheel
modul m=0,3; 256 teeth

operating voltage: 5 V DC ±5%
output signal: 1wo sinusoidal-signals moved around 90°
reference impulse
signal level: difference signal 1 Vss

motor data, type: 1FE1 074-4WM 31-6BA2, mfg Siemens

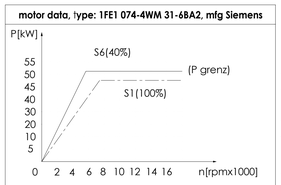

nominal speed	7700 rpm
nominal torque	60 Nm
nominal power	48 kW
nominal current	97 A
nominal voltage:	43 V
nominal frequency:	257 Hz

edges without dimension ISO 13715
inner edges H25
outside edges h25

general tolerances ISO 2768-m-H
surface description ISO 1302 R_a in µm
projection method I ISO 5456-2

weight ...
scale 1:1
material ---
origin
model no.

date name
model
draw
checked
scale

description
milling motor spindle
HSK-A80, 48 kW, 60 Nm, 16000 rpm

SPL Spindel und Präzisionslager GmbH
Am Gewerbegebiet 7
D-04700 Ebersbach

drawing no.
2717.0-00.0W-00

page 1 / 1 Tot.

replace for.
replaced by.

rev. change date name